DESCRIPTION	3ϕ QTY.
75X12MM GI FLAT RISER FOR EQU & STRU – (4NOS./ PHASE)	12 NOS.
75X12MM GI FLAT RISER FOR MAIN MECH. BOX–2Nos./BOX	2 NOS.
RISER FOR EARTH SW.(1) MECH. BOX–1Nos./BOX	2 NOS.
RISER FOR EARTH SW.(2) MECH. BOX–1Nos./BOX	2 NOS.
40mm M.S ROD AUX. EARTH MAT–1No./MAIN MECH. BOX	1 NO.
40mm M.S ROD AUX. EARTH MAT–1No./EARTH SW.(1) MECH. BOX	1 NO.
40mm M.S ROD AUX. EARTH MAT–1No./EARTH SW.(2) MECH. BOX	1 NO.

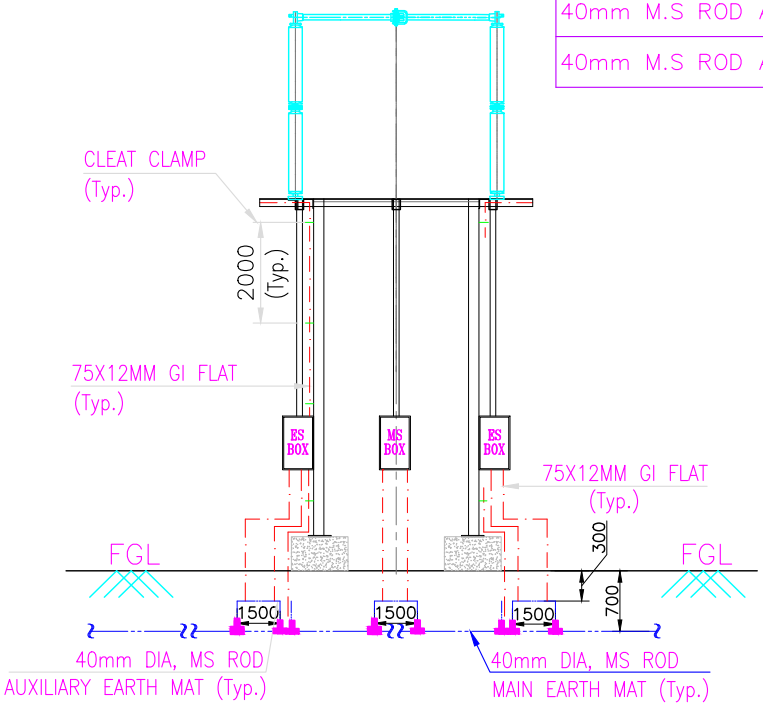

VIEW X–X

220kV &132kV CENTER BREAK ISOLATOR WITH 2 E/S

LEGENDS:–

40mm DIA, MS ROD

75X12MM GI FLAT

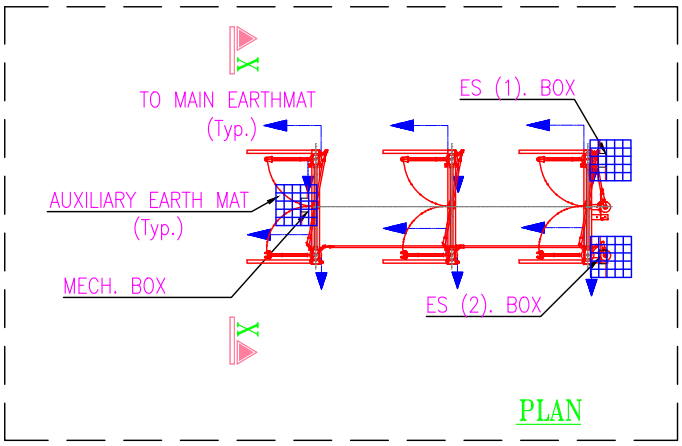

PLAN

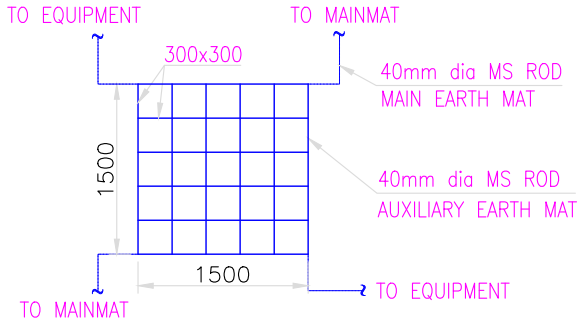

AUXILIARY EARTH MAT

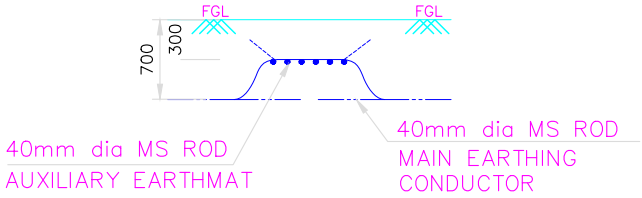

CONNECTION DETAIL OF

AUX EARTHMAT WITH MAIN EARTHMAT

NOTE:–

1. ALL DIMENSIONS ARE IN mm.
2. AUXILIARY EARTHMAT IS TO BE PROVIDED BELOW MANUAL OPERATING HANDLE, LOCATION SHALL BE SUCH THAT OPERATOR FOOT FALLS OVER AUXILIARY EARTHMAT WHILE OPERATING ISOLATOR MANUALLY.

A4 SHEET–297x210mm